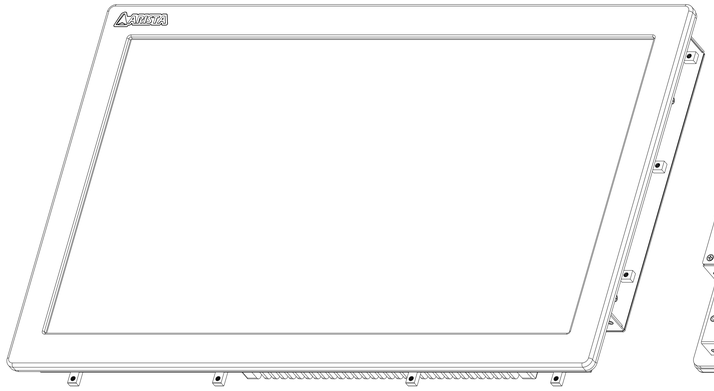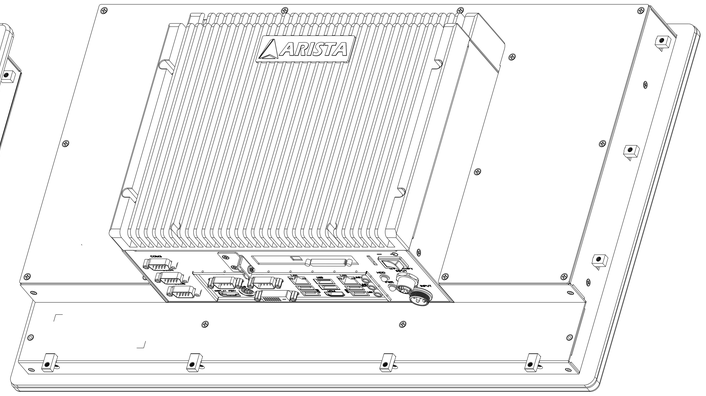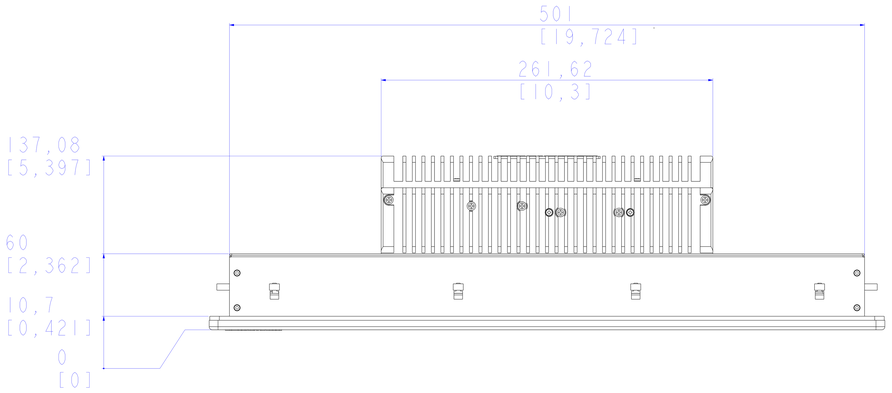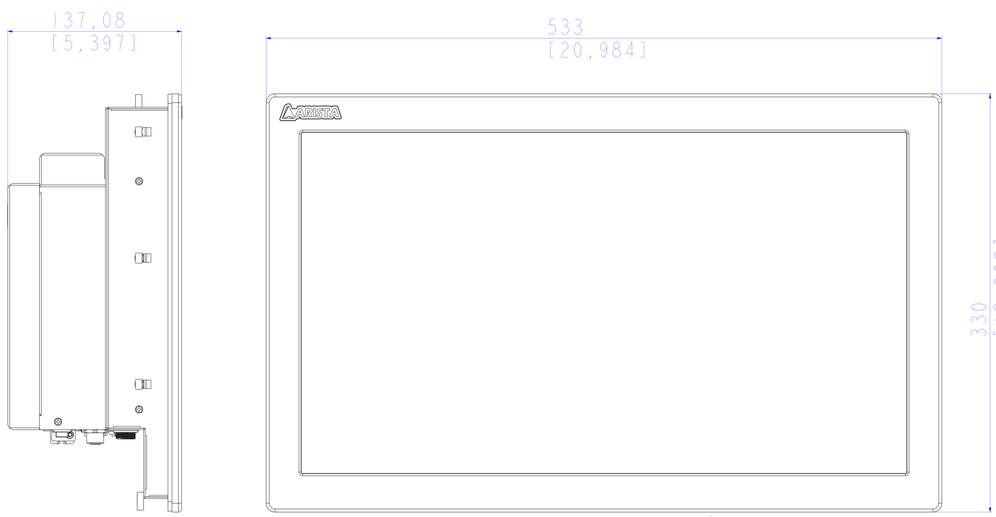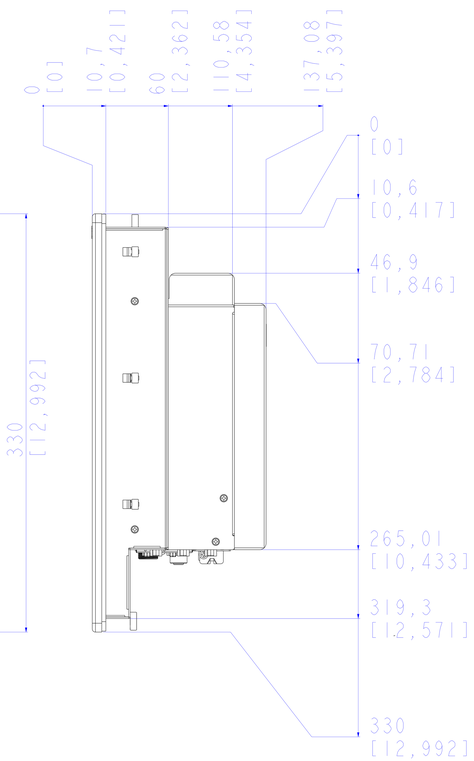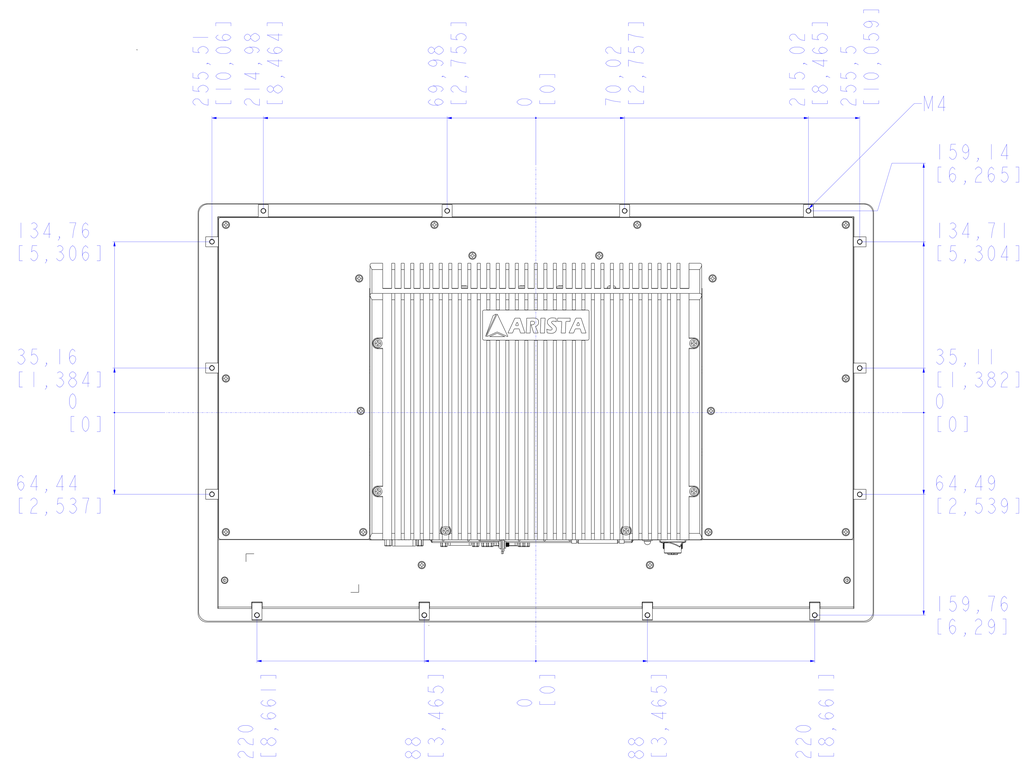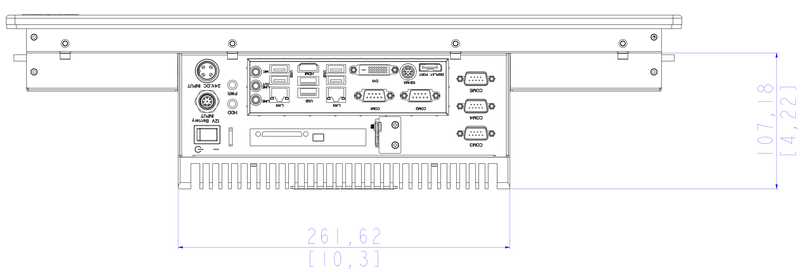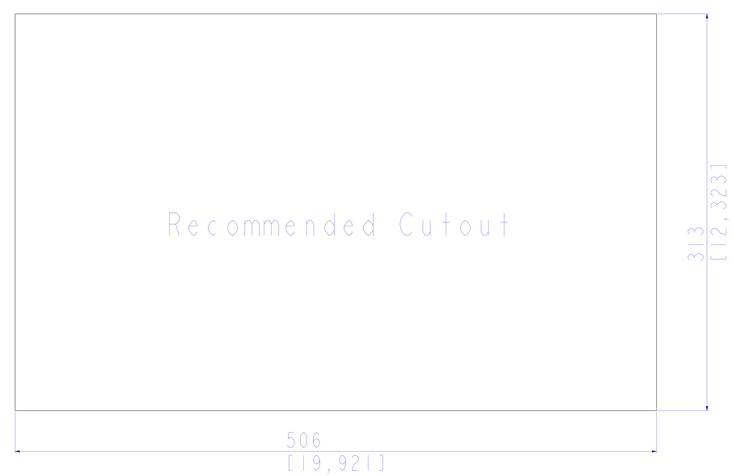ARP-2221AP-G01